Gas Injection System for Combustion Engines

TLB
Technologie-Lizenz-Büro
der Baden-Württembergischen
Hochschulen GmbH

An efficient system for injecting gas (e.g. hydrogen) into the combustion chamber of an internal combustion engine, operating at low pressure.

- Due to the special design of the injector, a lower pressure is required in the system
- Long service life of the injector
- High tightness of the system

Fields of application

- All internal combustion engines that run on gaseous fuels
- Work machines
- The conversion of old internal combustion engines to new fuels

Contact
Dipl.-Ing. Erick Pérez-Borroto Ferrer
TLB GmbH
Ettlinger Straße 25
76137 Karlsruhe | Germany
Phone +49 721-79004-0
perez@tlb.de | www.tlb.de

Development Status
TRL 7 - Test of a system prototype in real use

Patent Situation
DE 102020127020 B3 granted

Reference ID
20/044TLB

Service
Technologie-Lizenz-Büro GmbH has been entrusted with the exploitation of this technology and assists companies in obtaining licenses.

Background

The goal of reducing CO2 emissions by 55 percent until 2030 is Germanys contribution to the Paris climate agreement. Mobility plays a major role in this. Ever stricter CO2 limits for new cars demand appropriate technology. Brand new, as well as revitalized, technologies are on the rise; electromobility is just one variant. Even proven drive technologies, such as the internal combustion engine, can be made significantly more environmentally friendly through optimization. At Heilbronn University, new, more efficient components for reciprocating internal combustion engines are being designed. In the future, hydrogen or e-fuels could also be considered as fuels for internal combustion engines.

Problemstellung

The use of gaseous fuels, e.g., hydrogen or methane, is state of the art. The gas is usually mixed with air outside the combustion chamber (external mixture formation, intake manifold injection). With hydrogen in particular, this leads to weaknesses compared to conventional fuels, such as lower full-load torque and the risk of premature ignition of the mixture in the intake port.

In direct injection, the gas is injected directly into the combustion chamber via injectors. This prevents air from being displaced from the combustion chamber, thus increasing the mixture heating value and avoiding premature ignition in the so-called "internal mixture formation".

Solution

Researchers at Heilbronn University of Applied Sciences developed a direct injection system for gases consisting of specially designed injectors (one injector per engine cylinder), a high-pressure line system and a low-pressure line system. To exploit the advantages of both systems, to avoid leakage flows and to achieve the maximum injection volume, direct injection and intake manifold injection are combined.

The newly developed injectors have a higher opening cross-section than previous solutions in order to inject the desired amount of hydrogen in the available time period at the comparatively low pressure of 20 bar. A poppet valve, which is servo-hydraulically controlled, is used as the sealing medium to the combustion chamber. Furthermore, the injectors are designed to exhibit very low wear and to last for the entire service life of an engine.

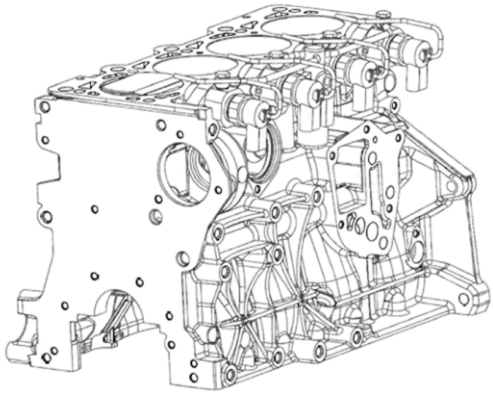

Fig. 1: Perspective view of the direct injection system applied to a cylinder crankcase (Source: Prof. K. Wittek, Heilbronn University of Applied Sciences)

Fig. 2: Single injector photographed in the engine laboratory of Heilbronn University of Applied Sciences [Source: Bejamin Schilling, TLB GmbH]