TLB
Technologie-Lizenz-Büro
der Baden-Württembergischen
Hochschulen GmbH

Compact drive unit with active planetary gear

Background

Many machine drives require a high torque, low torque ripple and high precision in small assembly spaces.

Problem

The high torque densities, which, for example, are required in robotics and medical engineering, have been achieved until now by using very high gear reduction ratios. Specialist drives are relied upon for these high gear reduction ratios, often of more than 100:1 in the above-mentioned use cases. Consequently, a functional principle, partially consisting of malleable drive components is often required. Among other things, this results in a lower degree of drive efficiency compared to those drives with different structures and those which are less strongly reduced. The high reduction restricts the dynamics of the drive unit as there are higher torques on the motor and the inertia moment in the drive is multiplied. In addition to the mechanical drawbacks, these drives are also typically expensive and are therefore also not ideal from an economic point of view.

Solution

The new drive unit (see fig.) features a planetary gear as well as a first electric motor (7) which is connected to the drive shaft of the planetary drive and powers the drive shaft (9) of the planetary gear. This first electric motor constitutes the main drive of the drive unit. In the usual manner, the planetary gear has two central wheels (1, 2), one or more impellers or planet wheels (3), the drive shaft and an output shaft. One of the two central wheels constitutes the so-called sun wheel / drive shaft (1). The remaining central wheel (power output / output shaft, e.g. connected to the robot axis) is either designed as ring gear (2) or as spur wheel. The drive unit is characterized by the fact that a further electric motor (4) is integrated into each of one or more of the impellers / planet wheels (3) via which the respective impeller (3) can be powered. The control device of the individual electric motors, i.e. the main drive motor as well as the further electric motors in the impellers is designed in such a way, that it generates the required torque, i.e. the desired linearity of the gear transmission of rotational speeds and torques to the drive shaft. Suitable, i.e. diverse or flexible, control strategies enable a variable drive behavior which can be adapted to the respective application.

Contact
Dipl.-Ing. Emmerich Somlo
TLB GmbH
Ettlinger Straße 25
76137 Karlsruhe | Germany
Phone +49 721-79004-0
somlo@tlb.de | www.tlb.de

Development Status
Validierung / TRL4

Patent Situation
DE102019203854A1 pending

Reference ID
18/106TLB

Service
Technologie-Lizenz-Büro GmbH has been entrusted with the exploitation of this technology and assists companies in obtaining licenses.

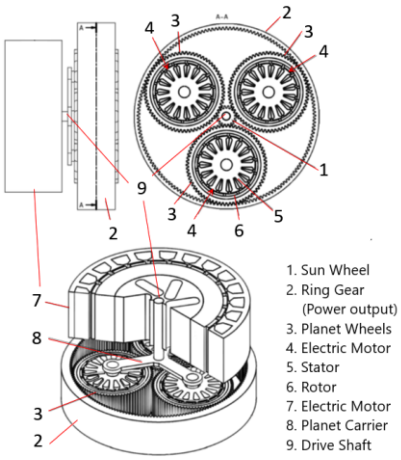

An exemplary embodiment of the invention.
[Image: University of Stuttgart]

Advantages

- High torque densities, low torque ripple, high dynamics, good efficient transmission behavior and compact structure
- Advantageous for robots or medically supportive devices (exoskeletons, active prostheses)
- The additional drives can also be used as sensors specific to the application

Fields of application

Wherever assembly space is limited. In addition, whenever high accuracy and low torque ripple are advantageous. Examples of these are drives, for example for lightweight robots, industrial robots, portable robots or medically supportive devices (exoskeletons, active prostheses etc.).