Technology Offer

TLB
Technologie-Lizenz-Büro
der Baden-Württembergischen
Hochschulen GmbH

Rectifier circuit for e-mobility charging stations allows for two operating modes - efficient switching for use of different, inductive charging systems

Background

Currently, inductive charging and matching receiver systems for electric cars are available on the market with varying degrees of performance. There are systems with a charging power of 3 kW and systems with a charging power of up to 20 kW. Currently, the interoperability of these systems or the efficient use of a 20 kW charging station for a charging capacity of 3 kW is problematic.

Problem

The available charging systems are optimized to deliver their nominal transmission power. If a system with a nominal transmission power of 20 kW is charged with only 3 kW, this causes high losses and reduces efficiency considerably, since operation in a lower power range is associated with high power factor correction capacities. In order to be able to use these systems efficiently even at lower levels, additional DC/DC converters have been used on the receiver side.

Solution

As part of the BIPoLplus project funded by the Federal Ministry of Education and Research (BMBF), a new concept of switching energy transmission systems for optimized interoperability was developed at the Institute for Electrical Energy Conversion (IEW) of the University of Stuttgart.

By integrating the new receiver unit with a rectifier circuit (g, see figure), with four diodes in a bridge circuit configuration and a switch (s), you can switch between two different operating modes. Operating the rectifier as a full-bridge or half-bridge rectifier reduces the reactive power requirement of the entire system during reduced power operations. This, in particular, avoids unnecessary oversizing of the primary coil (e) and of the power factor correction unit on the transmitter side (k, left), plus it increases performance and efficiency of the inductive power transmission system. As a result, receiving systems can operate in a second mode with low losses and thus use different nominal transmission powers much more efficiently.

Contact

Dipl.-Ing. Emmerich Somlo
TLB GmbH
Ettlinger Straße 25
76137 Karlsruhe | Germany
Phone +49 721-79004-0
somlo@tlb.de | www.tlb.de

Development Status

TRL3

Patent Situation

DE102014012703 A1 pending

Reference ID

14/041TLB

Service

Technologie-Lizenz-Büro GmbH has been entrusted with the exploitation of this technology and assists companies in obtaining licenses.

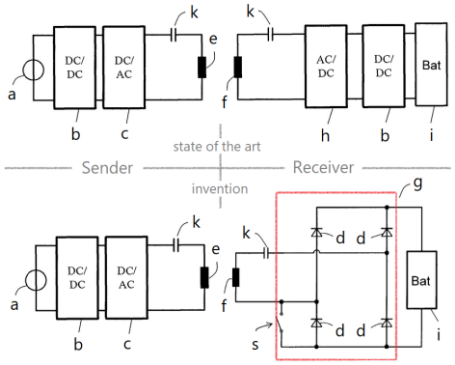

inductive charging system (top) and an embodiment of the system according to the invention (bottom), each with an identical transmitter unit (left). Legend: Power source (a), converters (b, c, h), transmitter and receiver coils (e / f), battery (i) and power factor correction units (k). The receiver/rectifier circuit (g) according to the invention also comprises a switch (s) and four diodes (d) [University of Stuttgart].

Advantages

- High charging efficiency independent of the nominal power of the transmitter unit
- Significant improvement of interoperability
- More consistent utilization of the charging infrastructure
- Switching can be done manually or automatically (via microcontroller)

Fields of application

This new type of receiver unit for inductive charging systems allows for much more efficient use of already existing charging infrastructures in the field of e-mobility.